arXiv:cond-mat/9902008v1 [cond-mat.mes-hall] 1 Feb 1999

Frequency Dependent Conductance of a Tunnel Junction in the Semiclassical Limit

Georg Goppert[1,2] and Hermann Grabert[1]
[1]Fakultat fur Physik, Albert{Ludwigs{Universitat,
Hermann{Herder{Strasse 3, D{79104 Freiburg, Germany
[2]Service de Physique de l'Etat Condense,
CEA-Saclay, 91191 Gif-sur-Yvette, France
(March 23, 2024)

The linear conductance of the a small metallic tunnel junction embedded in an electromagnetic environment of arbitrary impedance is determined in the semiclassical limit. Electron tunneling is treated beyond the orthodox theory of Coulomb blockade phenomena by means of a nonperturbative path integral approach. The frequency dependent conductance is obtained from Kubo's formula. The theoretical predictions are valid for high temperatures and/or for large tunneling conductance and are found to explain recent experimental data.

73.23.Hk, 73.40.Gk, 73.40.Rw

I. INTRODUCTION

In recent years a great deal of experimental and theoretical work [1,2] has explored Coulomb charging effects in systems with tunnel junctions. For small tunneling conductance $G_T \ll G_K$, where $G_K = e^2/h$ is the conductance quantum, the effects are theoretically well understood in terms of the "orthodox" perturbative approach in the tunneling Hamiltonian [3]. Present lithographic techniques make the region of moderate to large tunneling conductance experimentally accessible [4{6]. In fact when using Coulomb blockade devices in thermometry [7] or as highly sensitive electrometers [8], a large tunneling conductance is often desirable in view of the larger measuring signal. Several theoretical advances to describe strong tunneling have been made recently. These more sophisticated theories roughly split into two groups. One may use higher order perturbation theory in the tunneling Hamiltonian [9{11] and, based on this, a perturbative renormalization group approach [12], while the other set of papers starts from a formally exact path integral expression [13] serving as a basis for analytical calculations [14{17], Monte Carlo simulations [18,19], or a variational approach [20]. Despite this progress a complete theoretical understanding is still missing.

In this paper we focus on the frequency dependent conductance of a single metallic tunnel junction coupled to an electromagnetic environment of arbitrary impedance, and use a path integral formulation to analytically calculate the leading order quantum corrections. The semiclassical evaluation of the path integral is justified at high temperatures and/or for large tunneling conductance and yields the frequency dependent linear conductance. So far experimental data [5] are only available in the zero frequency limit where good agreement is found.

The conductance of a tunnel junction is related to current fluctuations depending on the whole circuit. Via network transformations it is always possible to transform the linear electromagnetic environment into an admittance $Y(\omega)$ in series with a tunnel junction with tunneling conductance G_T and capacitance C biased by a voltage source V, cf. Fig 1.

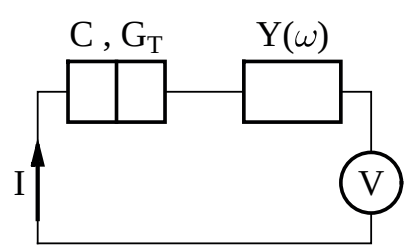

FIG. 1. Circuit diagram of a tunnel junction in series with an admittance.

II. MODEL AND LINEAR CONDUCTANCE

Our interest is in the zero bias differential conductance $G = \partial I/\partial V|_{V=0}$ where I is the current in the leads and V the applied voltage. Employing the Kubo formula

$$G(\omega) = \frac{1}{i\hbar\omega} \lim_{i\omega_n \to \omega + i\epsilon} \int_0^{\hbar} d\tau\, e^{i\omega_n \tau} \langle I(\tau) I(0) \rangle; \tag{1}$$

where the $\omega_n = 2\pi n/\hbar$ are Matsubara frequencies, the conductance is related to the imaginary time current autocorrelation function which is most conveniently calculated as a variational derivative of a generating functional $Z[\eta]$ depending on an auxiliary field $\eta(\tau)$. Introducing a phase variable φ, which is canonically conjugate to the charge transferred through the junction, the generating functional can be written as a path integral

$$Z[\eta] = \int \mathcal{D}[\varphi] \exp\left[-\frac{1}{\hbar} S[\varphi;\eta]\right] \tag{2}$$

with the effective Euclidean action

$$S[\varphi;\eta] = S_C[\varphi] + S_T[\varphi] + S_Y[\varphi;\eta]. \tag{3}$$

Here

$$S_C[\varphi] = \int_0^{\hbar} d\tau\, \frac{\hbar^2 C}{2e^2} \dot{\varphi}^2$$

describes Coulomb charging and

$$S_T[\varphi] = 2\int_0^{\hbar} d\tau \int_0^{\hbar} d\tau'\, \alpha(\tau - \tau') \sin^2\frac{\varphi(\tau) - \varphi(\tau')}{2} \tag{4}$$

quasi-particle tunneling across the junction. The kernel $\alpha(\tau)$ is determined by the tunneling conductance G_T and may be written as

$$\alpha(\tau) = \frac{1}{\hbar} \sum_{n=-1}^{\infty} e(\omega_n) e^{i\omega_n \tau}$$

where the Fourier coefficients are given by

$$e(\omega_n) = \frac{\hbar}{4} \frac{G_T}{G_K} |\omega_n|. \tag{5}$$

The last term in the action (3) describes the effective environment and includes the auxiliary field $\eta(\tau)$

$$S_Y[\varphi;\eta] = \frac{1}{2}\int_0^{\hbar} d\tau \int_0^{\hbar} d\tau'\, k(\tau - \tau') \left[\varphi(\tau) + \frac{e}{\hbar}\eta(\tau) - \varphi(\tau') - \frac{e}{\hbar}\eta(\tau')\right]^2; \tag{6}$$

where the kernel $k(\tau)$ can also be written as a Fourier series with coefficients

$$\tilde{k}(\omega_n) = \frac{\hbar}{4} \frac{\hat{Y}(|\omega_n|)}{G_K} |\omega_n|. \tag{7}$$

Here $\hat{Y}(s)$ denotes the Laplace transform of the environmental response function, cf. Ref. [21]. Due to causality, for $\mathrm{Re}(s) > 0$, one may write $\hat{Y}(s) = Y(is)$ where $Y(\omega)$ is the frequency dependent admittance of the environment.

We now perform the functional derivatives explicitly and get for the correlator [16]

$$\langle I(\tau) I(0) \rangle = \frac{1}{Z} \int \mathcal{D}[\varphi] \exp\left[-\frac{1}{\hbar} S[\varphi;0] - 2\frac{e^2}{\hbar} k(\tau) + I[\varphi;\eta] I[\varphi;0]\right]; \tag{8}$$

where $Z = Z[0]$ denotes the partition function and the current functional $I[\varphi;\eta]$ is given by

$$I[\varphi;\eta] = \frac{2e}{\hbar} \int_0^{\hbar} d\tau'\, k(\tau - \tau') \varphi(\tau'). \tag{9}$$

The first term in (8) is independent of the phase variable φ and can be handled exactly, whereas the second term cannot be evaluated without further approximations. Thus, we split the conductance in two parts $G = G_1 + G_2$. The first part stemming from the second order functional derivative of the action reads

$$G_1(\omega) = \frac{1}{i\hbar\omega}\frac{2e^2}{h}\hat{\kappa}(\ i\omega + \ ) = Y(\omega); \tag{10}$$

where the unique continuation [22] of $\hat{\kappa}(\omega)$ is obtained by defining the analytic continuation of the absolute value as

$$|z| = \begin{cases} z & \mathrm{Re}(z) > 0 \\ z & \mathrm{Im}(z) < 0 \end{cases}. \tag{11}$$

The second part G_2 of the conductance results from a product of two first order derivatives of the action, and we write

$$G_2(\omega) = \frac{1}{i\hbar\omega}C_2(\ i\omega + \ ) \tag{12}$$

with

$$C_2(\ _n) = \frac{1}{Z}\int D[\varphi]\exp\left[\frac{1}{\hbar}S[\varphi;0]\right]F[\varphi;\ _n]; \tag{13}$$

where the explicit form of the current functional (9) written in terms of the Fourier transform of the phase yields

$$F[\varphi;\ _n] = \frac{4e^2}{h}\hat{\kappa}(\ _n)\hat{e}(\ _n)\sum_{m=1}^{\infty}\hat{\kappa}(\ _m)\hat{e}(\ _m). \tag{14}$$

This is a formally exact representation of the linear conductance.

III. SEMICLASSICAL LIMIT

To proceed we expand the effective action around the classical path. Following the lines of Ref. [16] we change to Fourier space diagonalizing the second order variational action. The eigenvalues are given by

$$(\ _n) = \frac{\hbar^2}{e^2}|\ _n|\left[\hat{G}_0(\ _n) + \hat{Y}(|\ _n|)\right]; \tag{15}$$

where

$$\hat{G}_0(\ _n) = |\ _n|C + G_T \tag{16}$$

describes the junction as a capacitance in parallel with an Ohmic resistor characterized by the classical tunneling resistance. Including the fourth order variational derivative of the action we get from (13) the expression

$$C_2(\ _n) = \frac{4e^2}{h}\frac{\hat{\kappa}(\ _n)^2}{(\ _n)}\left[1 + \frac{2}{(\ _n)}\sum_{\substack{m=1\\ m\neq 0}}^{\infty}\frac{e(\ _{n+m})\quad e(\ _n)\quad e(\ _m)}{(\ _m)}\right]. \tag{17}$$

The convergence of this expansion depends crucially on the eigenvalues (15). To estimate the validity, we consider the smallest eigenvalue in more appropriate units

$$(\ _1) = \left[\frac{2\ ^2}{E_C} + \frac{G_T + \hat{Y}(\ _1)}{G_K}\right] \tag{18}$$

where denotes the inverse temperature and $E_C = e^2/2C$ the charging energy. This eigenvalue has to be large compared to 1, and we see that the expansion is useful for large conductance $G_T + \hat{Y}(\ _1) \quad G_K$ and/or high temperatures $E_C \quad 2\ ^2$. We now perform the limit $i\ _n \to \omega + i$. Consider the analytically continued eigenvalue

$$(\ i\omega) = \ i\omega\frac{\hbar^2}{e^2}[G_0(\omega) + Y(\omega)]; \tag{19}$$

where

$$G_0(!) = G_T \quad i!C \tag{20}$$

is the continuation of the Laplace transform $\Phi_0(\ i! + \ )$. The relative minus sign of the capacitive term is due to the usual de nition of the Fourier transform in quantum mechanics, the electro-technical convention is obtained by replacing ! ! ! . For small frequencies the continued eigenvalue (19) is no longer large compared to 1 and we are faced with a problem of order reduction. This is handled systematically in Ref. [16] showing that inclusion of the fourth order variation is su cient up to rst order in E_C and $G_K = (G_T + \Psi(_1))$, respectively. In the reminder we omit the order symbol, but the meaning of the equations is always meant in a limiting sense up to this order. After performing the continuation we get for the conductance

$$G(!) = \frac{G_e(!)Y(!)}{G_e(!) + Y(!)} \tag{21}$$

with an e ective linear conductance of the junction

$$G_e(!) = G_T[1 \quad U(!)] \quad i!C: \tag{22}$$

This describes a linear element $G(!) = G_T[1 \quad U(!)]$, depending on the whole circuit, in parallel with the junction capacitance C as depicted in Fig. 2a. Here

$$U(!) = \frac{2}{i!} \sum_{m=1}^{1} {}_m \frac{1}{(_m \quad i!)} \quad \frac{1}{(_m)} \tag{23}$$

describes the suppression of the conductance due to discrete charge transfer. The general form (21) is valid only to rst order in E_C and $G_K = (G_T + \Psi(_1))$, respectively. A systematic treatment of higher order contributions does not allow for a description of the tunnel junction in terms of an e ective linear element depending on the whole circuit. However, a partial resummation of higher order terms performed by a self consistent harmonic approximation [20] leads again to the form (21).

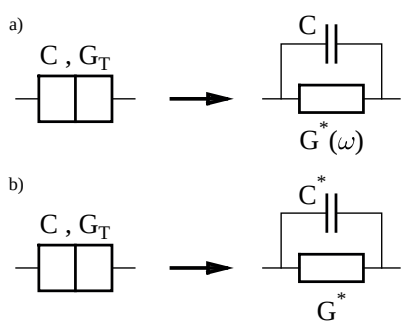

FIG. 2. E ective circuit diagrams for a tunnel junction in the semiclassical limit a) for arbitrary frequency and b) in the low frequency limit.

IV. DISCUSSION

For further discussion of the conductance and a comparison with experimental data we now restrict ourselves to ohmic dissipation $Y(!) = Y$. We then get for the e ective linear element

$$\frac{G(!)}{G_T} = 1 \quad \frac{h \quad (1 + u + \dot{\imath}) \quad (1 + \dot{\imath})}{u} + \frac{(1 + u + \dot{\imath}) \quad (1 + u)^i}{\dot{\imath}} \frac{E_C}{2}; \tag{24}$$

where is the logarithmic derivative of the gamma function and

$$u = g\frac{E_C}{2\ ^2}; \qquad \dot{\imath} = \frac{h}{2\ i}! \tag{25}$$

are auxiliary quantities. We also have introduced the dimensionless parallel conductance $g = (G_T + Y)=G_K$. The quantum corrections depend only on this combination of conductances. The real and imaginary parts of $G(!)=G_T$ are depicted in Fig. 3 for $E_C = 1$ and various values of g.

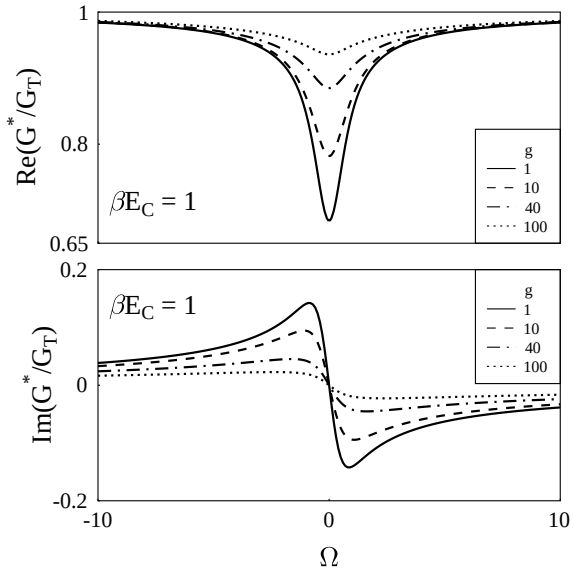

FIG. 3. Real and imaginary parts of $G(!)=G_T$ in the ohmic damping case for $E_C = 1$ and dimensionless conductance $g = 1;10;40$ and 100 in dependence on the dimensionless frequency $= h!=2E_C$.

Due to the logarithmic behavior of the psi function for large arguments, the quantum corrections disappear non-analytically for large !. For small frequencies the ective element behaves like a renormalized admittance with an additional capacitance in parallel and we may de ne a renormalized capacitance C and a renormalized conductance $G = G(! = 0)$, cf. Fig. 2b. For the renormalized conductance we get

$$\frac{G}{G_T} = 1 \quad \frac{+ \quad (1+u)}{u} + \quad {}^{0}(1+u) \quad \frac{E_C}{{}^{2}} \tag{26}$$

which coincides with our previous result [16]. G exhibits a nonanalytic behavior in the limit of vanishing environmental resistance.

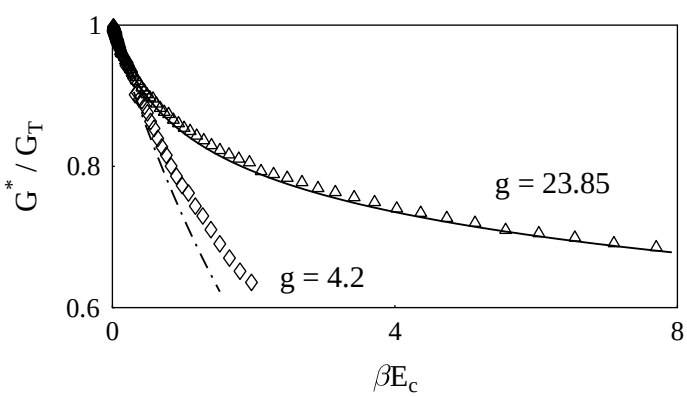

FIG. 4. The linear conductance versus the dimensionless temperature for two dimensionless parallel conductance $g = 4:2$ and 23:85 compared with experimental data (symbols) by Joyez et al. [5].

We compare our prediction (26) with recent experimental data by Joyez et al. [5] for dimensionless conductance $g = 4:2$ and 23:85. Fig. 4 shows that in the limit of large conductance we are able to cover the whole temperature range explored experimentally with no adjustable parameter, whereas for moderate conductance only the high temperature part is covered by the semiclassical theory.

The renormalized capacitance C incorporates the linear part in ! of the imaginary part of $G(!)$ and the geometrical capacitance C, and we get

$$\frac{C}{C} = 1 + \frac{G_T}{G_K} \quad \frac{\frac{{}^{2}}{6} \quad {}^{0}(1+u)}{2 \quad {}^{2}u} \quad \frac{{}^{00}(1+u)}{4 \quad {}^{2}} \quad \frac{(E_C)^2}{{}^{2}} : \tag{27}$$

The correction shows a quadratic dependence on E_C. The renormalization is suppressed at high temperatures and also vanishes linearly for large conductance.

In summary, we have derived an analytical expression for the frequency dependent linear conductance of a tunnel junction in the semiclassical limit. We have shown that this limit covers not only high temperatures but also large conductance and agrees with experimental findings.

The authors would like to thank Michel Devoret, Daniel Esteve, and Philippe Joyez for valuable discussions. One of us (GG) acknowledges the hospitality of the CEA-Saclay during an extended stay. Financial support was provided by the Deutsche Forschungsgemeinschaft (DFG) and the Deutscher Akademischer Austauschdienst (DAAD).

---

[1] Single Charge Tunneling, edited by H. Grabert and M.H. Devoret, NATO ASI Series B, Vol. 294 (Plenum, New York, 1992).
[2] M.A. Kastner, Rev. Mod. Phys. 64, 849 (1992).
[3] D.V. Averin and K.K. Likharev, in Mesoscopic Phenomena in Solids, ed. by B.L. Altshuler, P.A. Lee, and R.A. Webb, p. 173 (North-Holland, Amsterdam, 1991).
[4] P. Joyez, V. Bouchiat, D. Esteve, C. Urbina, and M.H. Devoret, Phys. Rev. Lett. 79, 1349 (1997).
[5] P. Joyez, D. Esteve, and M.H. Devoret, Phys. Rev. Lett. 80, 1956 (1998).
[6] S. Farhangfar, J.J. Toppari, Y.A. Pashkin, A.J. Manninen, and J.P. Pekola, Europhys. Lett. 43, 59 (1998).
[7] J.P. Pekola, K.P. Hirvi, J.P. Kauppinen, and M.A. Paalanen, Phys. Rev. Lett. 73, 2903 (1994).
[8] T.A. Fulton and G.J. Dolan, Phys. Rev. Lett. 59, 109 (1987).
[9] H. Grabert, Phys. Rev. B 50, 17364 (1994).
[10] J. Konig, H. Schoeller, and G. Schon, Phys. Rev. Lett. 78, 4482 (1997).
[11] G. Goppert, H. Grabert, N.V. Prokof'ev, and B.V. Svistunov, Phys. Rev. Lett. 81, 2324 (1998).
[12] J. Konig and H. Schoeller, Phys. Rev. Lett. 81, 3511 (1998).
[13] G. Schon and A.D. Zaikin, Phys. Rep. 198, 237 (1990).
[14] D.S. Golubev and A.D. Zaikin, JETP Lett. 63, 1007 (1996).
[15] X. Wang and H. Grabert, Phys. Rev. B 53, 12621 (1996).
[16] G. Goppert, X. Wang, and H. Grabert, Phys. Rev. B 55, R10213 (1997).
[17] G. Goppert and H. Grabert, Phys. Rev. B 58, R10155 (1998).
[18] X. Wang, R. Egger, and H. Grabert, Europhys. Lett. 38, 545 (1997).
[19] W. Hofstetter and W. Zwerger, Phys. Rev. Lett. 78, 3737 (1997).
[20] G. Goppert and H. Grabert, (to be published).
[21] H. Grabert, P. Schramm, and G. Ingold, Phys. Rep. 168, 115 (1990).
[22] G. Baym and N.D. Mermin, J. Math. Phys. 2, 232 (1961).